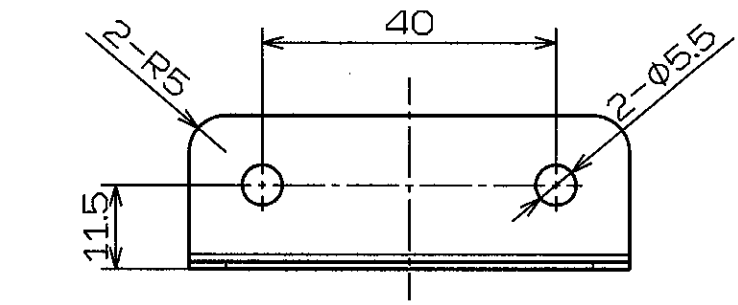

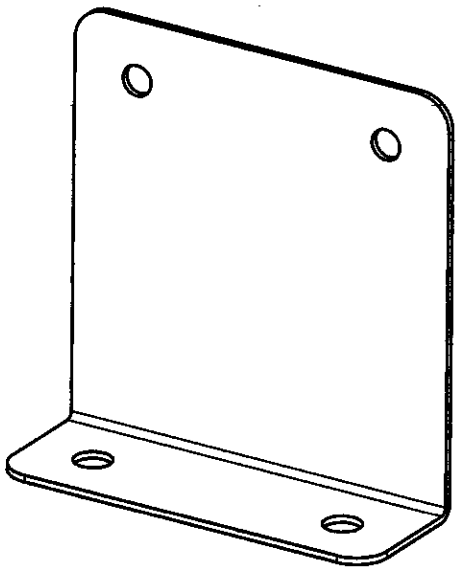

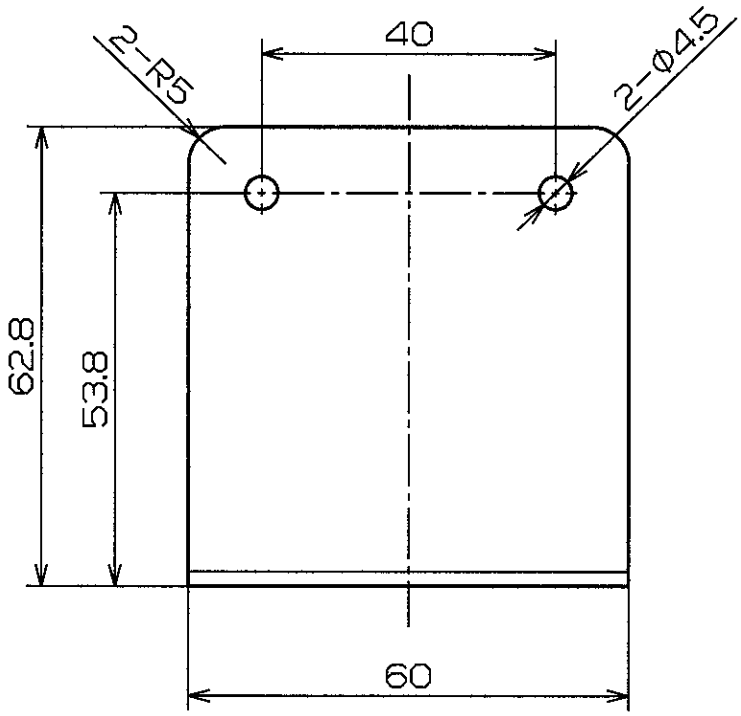

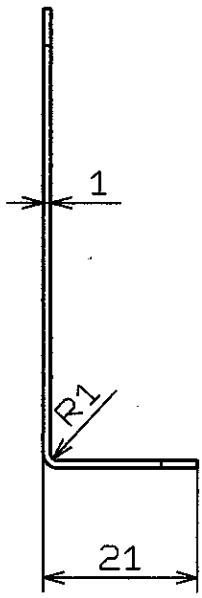

GSG-A026（環境負荷物質の管理規定）遵守すること。
THIS PART SHALL CONFORM WITH GSG-A026.

DATA ID	T9999XXXXT900****
社内品番 PART NO.	PLNNM-******

REV	DATE	DETAIL	DESIGN	APPROVAL

TOLERANCE

COMMENT:

MASS: 13g

MATERIAL : AL

FINISH : –

PART NO. _ NAME _ REV. NO _ SUB REV. NO.:

MPPE70310A_PLNNM-00000_BRACKET

DESIGN		DRAWING		UNIT: mm	SCALE: 1:1 (FREE)	A4	designed by
CHECK		APPROVAL		DRAWING UNMEASURABLE	SHEET 1 / 1		